ZERO DEFECTS Manufacturing Platform ZDMP

ZDMP Blog

Orchestration Design and Run-Time

By Jose Luis Alfonso, Senior Developer at Information Catalyst for the Enterprise (ICE)

Some questions for you

- Think on a business process inside your company, e.g. deliver a product, how many actions are involved?
- How many different actors, systems, actions are involved on that process?
- How quickly your company adapts and applies changes when they are needed?
- Did you know you can leverage BPMN to describe, automate and monitor all the steps?

Adapting to business changes

"Faster change and more disruption are putting pressure on businesses. As a result, business transformation leaders are required to constantly change business operations to activate new business models, but they simply can't keep up.": Gartner [1].

A standard Business Process Model and Notation (BPMN) provides businesses with the capability of understanding their internal business procedures in a graphical notation and will give organizations the ability to communicate these procedures in a standard manner. Furthermore, the graphical notation facilitates understanding the collaborations and business transactions between organizations. This will ensure that businesses can understand themselves and participants in their business and will enable organizations to adjust to new internal and B2B business circumstances quickly [2].

A visual way to describe your business

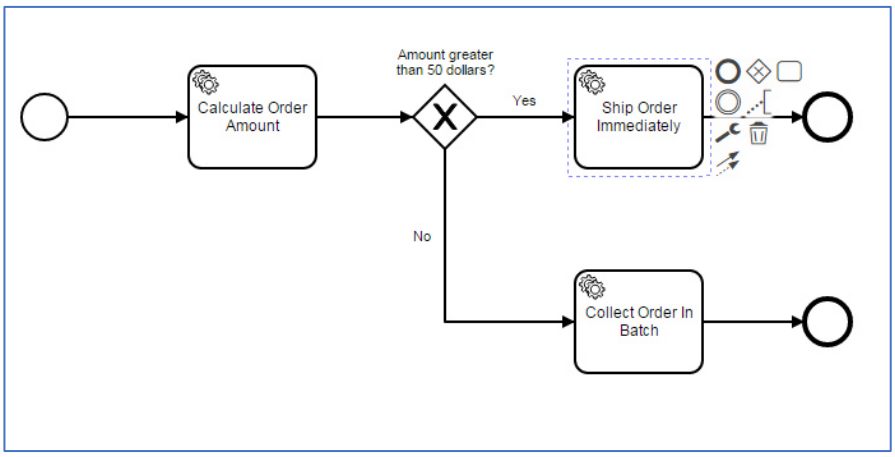

In this diagram [3], you can see the process of calculating an order amount, and then deciding which further action to execute based on a condition. It uses the BPMN notation to describe all the steps involved. In a similar way, all processes inside a company can be described in the same manner.

What BPMN can do for your company

The world of business processes has changed dramatically over the past few years. Processes can be coordinated within and between an organization's natural boundaries. A business process now spans multiple participants and coordination can be complex. Until BPMN, there has not been a standard modelling technique that addresses these issues. BPMN has been developed to provide users with a royalty free notation. This benefits users in an analogous manner to which UML standardised the world of software engineering. There are training courses, books and a body of knowledge that users can access in order to better implement a business process. [4]

Although BPMN can feel a bit 'complex' at the beginning, it was designed with business users in mind. With no, or almost no, knowledge on programming, the user can create complex processes that connect together input from users and outputs from existing services inside a company. At the end, business runs on top of the technology, and instructs how the different pieces must work together.

What will ZDMP achieve

The Orchestration Design and Runtime is the main ZDMP tool for designing, executing and monitoring business process, leveraged by Camunda, the open source BPMN Engine.

The Designer is a web-based application that gives all the tools needed for creating and managing business processes. It has an integration with the ZDMP marketplace and an API gateway, allowing you to add any service to a process diagram, as simple as dragging and dropping the one you want.

An important part of any BPMN engine is the ability to connect different services together, ie connecting the output from one service and the input of the next. That sequence connection is decided by you, allowing the execution of tasks one by one or in parallel.

Another important element are the user tasks. These operations generate a task for a specific user or department, for querying specific input. For example, designing a form to ask for different data to the accounts department, or to ask a client about his review after buying a product. ZDMP has an integrated task management system to do that.

Another element is process monitoring. Each time a process is created, a new instance starts. That means a single process definition (a diagram) can have multiple running instances, each one at a different state. ZDMP provides a centralized monitoring dashboard so that metrics can be presented from running processes.

Once a diagram is ready, it can be published so the engine can execute it. ZDMP leverages Camunda, the open source BPMN engine that has both great performance and BPMN standard support. Of course, ZDMP has tweaked it so it can give a lot of options not available in the community version.

In addition, if you do not want to rely on the BPMN engine, but create a more performant process, you can use the BPMN to NodeJS generator offered in the system. This is intended to be used by technical users, to create service to service flows, and just get the source code!

Without doubt, BPMN is here to help your company improve the processes, and quickly adapt to the constant changes in the market, and ZDMP offers you that.

References/Acknowledgements

[1] Gartner article, available on: https://www.gartner.com/smarterwithgartner/bpm-is-critical-to-business-transformation-success

[2] Official bpmn documentation, **https://bpmn.org**

[3] Official Camunda site, **https://camunda.com/products/modeler/**

[4] Official bpmn documentation, **https://bpmn.org**